PENTAIR

DISTRIBUTED BY:
IAS Industry Air Sales Ltd.
YOUR LEADING AIR FILTRATION SPECIALISTS
EMAIL: info@industryairsales.com
2 Automatic Road, Unit 123
Brampton, ON, Canada L6S 6K8
TEL: 888-211-0171 / 905-458-8900
FAX: 905-458-4599
www.industryairsales.com

mecair PXA/PEX

HAZARDOUS PILOTS

PENTAIR CLEAN AIR SYSTEMS

MECAIR HAZARDOUS PILOTS

PXA/PEX

DESCRIPTION

The two-way (normally closed) **explosion-proof pilot model PXA 42F** and **PEX 42H** is specifically designed to be installed on diaphragm valves type VEM. The PXA 42F and PEX 42H explosion-proof solenoid valve is designed for those applications where introduction of a spark may ignite the surrounding atmosphere. The PEX and PXA series has been designed and approved according to the ATEX Directive 94/9/CE and has **II 2 G Ex d IIC T4 - II 2 D Ex tD A21 IP67 T135°C**, **IP67** water resistant, which ensures that any spark occurring within the solenoid will remain restricted within the internal area of the enclosure, with no possibility of spreading to the external environment.

GENERAL CHARACTERISTICS	
Protection	II 2 Ex tD A21 IP67 T135°C
Coil insulation	Class H
Coil voltage	24 V AC – 50 Hz 24 V AC – 60 Hz 110/220 V – 50/60 Hz 24/110 V DC
Power consumption	19 VA/AC 12 W/DC
Enclosure	Explosion-proof II 2 G Ex d IIC T4 - II 2 D Ex tD A21 IP67 T135°C
Electrical connection	R ½" or ½" NPT
Approvals INERIS	INERIS 03 ATEX 0071XII 2GD

SOLENOID PILOT	PXA42F	PXA42H	PEX42F	PEX42H
Solenoid enclosure	Diecast aluminium – anodised	Diecast aluminium – anodised	Stainless steel	Stainless steel
Pilot group	Nickel-plated brass	Stainless steel	Nickel-plated brass	Stainless steel
Screws and bolts	Stainless steel	Stainless steel	Stainless steel	Stainless steel
Gaskets	Nitrile rubber	Nitrile rubber	Nitrile rubber	Nitrile rubber
Weight	0,8 kg	0,8 kg	1,5 kg	1,5 kg

PXA/PEX

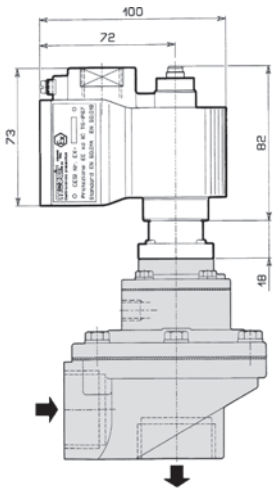

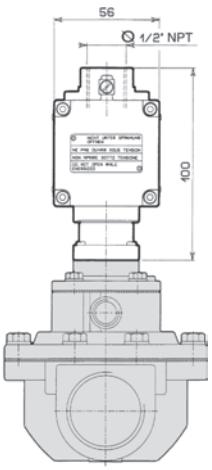

MECAIR HAZARDOUS PILOTS

PXA/PEX

ASSEMBLY DIAGRAM

PXA/PEX

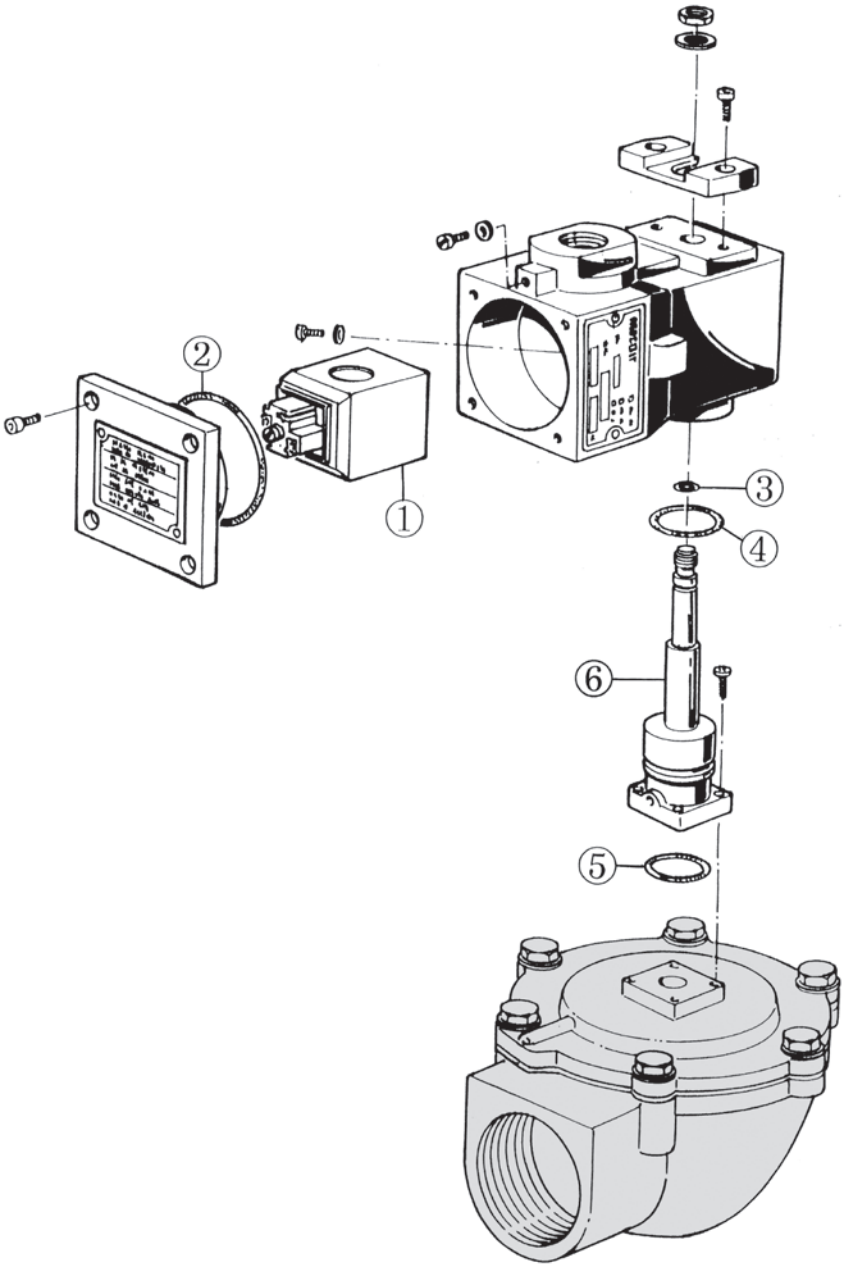

MECAIR HAZARDOUS PILOTS

PXA/PEX

DESCRIPTION

Mecair manufactures a complete range of **explosion-proof solenoid pilots** for compressed air or inert gas, in the 2- or 3-way version (normally closed). Bolts and screws are in stainless steel; gaskets are in NBR. Operating pressure range is from 0,5 to 8 bar. The explosion-proof pilot is certified **II 2 G Ex d IIC T4 - II 2 D Ex tD A21 IP67 T135°C**. The explosion-proof solenoid coils are in conformity with the European directive – ATEX 94/9/CE. The explosion-proof pilots can be mounted on Namur valves, industrial valves and any other valve where the use of a 2-way or 3-way valve is required.

GENERAL CHARACTERISTICS	
Fluids	Filtered, oil-free air or inert gas
Pneumatic connection	¼" Gas
Protection	II 2 D Ex tD A21 IP67 T135°C
Coil insulation	Class H
Temperature range – Solenoid coil	–20°C/+80°C
Coil voltage	24 V AC – 50 Hz 24 V AC – 60 Hz 110/220 V AC – 50/60 Hz 24/110 V DC
Enclosure	II 2 G Ex d IIC T4 - II 2 D Ex tD A21 IP67 T135°C Orientation in various positions
Electrical connection	½" NPT ½" NPT
Approvals INERIS	INERIS 03 ATEX 0071X II 2GD

MODEL	N. WAYS	Ø ORIFICE (MM)	ENCLOSURE	PILOT BODY	WEIGHTING KG
PEX42X	2	4	Stainless steel	Stainless steel	1,3
PEX42T	2	4	Stainless steel	Nickel-plated brass	1,3
PEX43T	3	1,5	Stainless steel	Nickel-plated brass	1,3
PXA42X	2	4	Diecast aluminium – anodised	Stainless steel	0,7
PXA42T	2	4	Diecast aluminium – anodised	Nickel-plated brass	0,7
PXA43T	3	1,5	Diecast aluminium – anodised	Nickel-plated brass	0,7

MECAIR HAZARDOUS PILOTS

PXA/PEX

DIMENSIONS

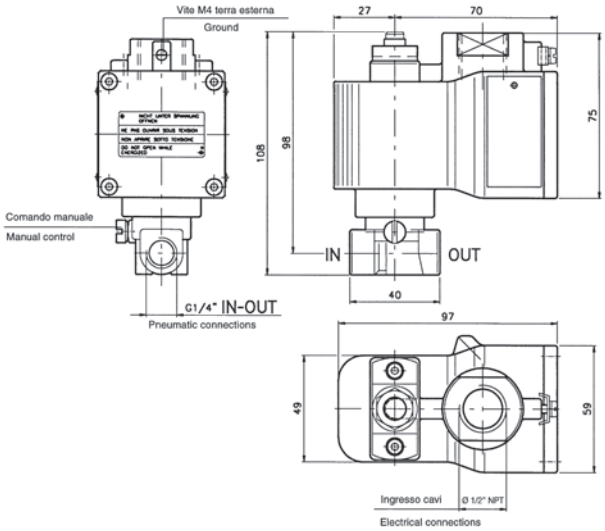

ASSEMBLY DIAGRAM

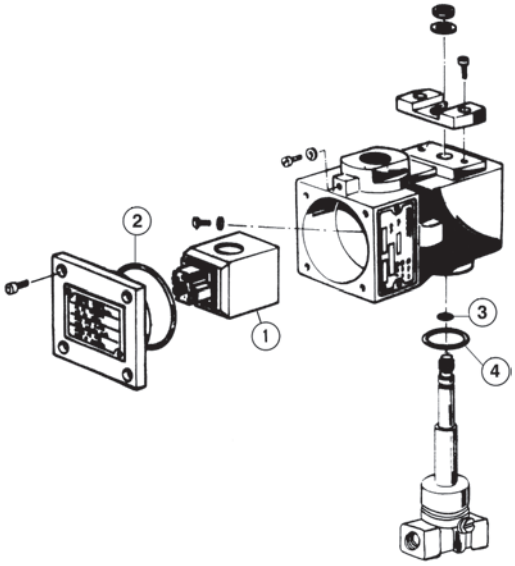

PENTAIR

CLEANAIRSYSTEMS.COM

© 2014 Pentair Clean Air Systems reserves the right to change product designs and specifications without notice.

Mecair Hazardous Pilots Rev01 04/14